STS Electronics Ltd.
14 Stancionna Str., 5300 Gabrovo, BULGARIA

LABEL APPLICATOR FOR ONE AND TWO LABELS STS808-3

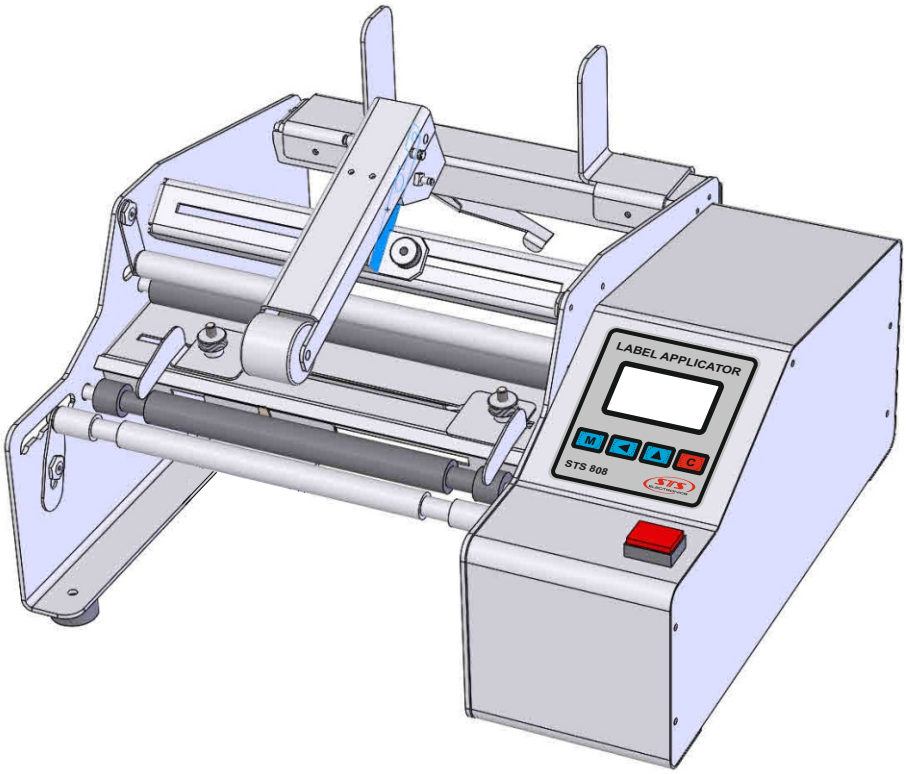

User manual

V.2.00

phone: (+359) 66 801 536 fax: (+359) 801 547
info@stselectronics.eu www.stselectronics.eu

Description

The machine is designed to place one or two self-adhesive labels (front and rear) on cylindrical containers of different diameter and length with smooth walls. The labels must be on one roll, (front and rear - placed consecutively) on the roll guide.
The containers need to be placed and removed manually. The beginning of the work is performed by pressing the built-in 'Start' button or by an external start / 'Start' pedal connected to the intended coupling /.
The control panel allows you to count the labels which has been used.

Technical data

Power supply:	220Vac, 50Hz.
Own consumption:	< 100VA.
Electrical connecting:	cable with plug type 'SHUKO'.
Dimensions:	365mmW, 245mmH, 330mmD.
Diameter of the container:	25 ... 160mm.
Length of the container: /distance between the container guides/	80 ... 240mm.
Diameter of label roll:	< 200mm.
Spool diameter:	50 ... 70mm.
Roll / Label Width:	25 ... 150mm.
Label length:	25 ... 500mm.*
Distance between the labels:	> 2,5mm.
Pulling speed:	0,1m/s.

* the sum of the lengths of the two labels should not be greater than the circumference of the container.

phone: (+359) 66 801 536 fax: (+359) 801 547
info@stselectronics.eu www.stselectronics.eu

Preparation for work and setup.

The orientation of the container (left-right) is selected, depending on the direction of the printed labels. Adjust the pressure arm and idler roller according to the diameter of the container. Adjust the guides so that the container is in the middle of the working area.

The label roll is placed on the Label bar so that the labels are against the gluing area. The position is fixed with the two magnetic roll guides. The roller drag arm is positioned in the center of the roller.

The pressure roller is "unlocked" by moving forward. Label bar is loaded according to the attached scheme. The sensor is positioned so that labels pass through its working area. It is trained according to the attached manual. Next to the peel edge is positioned the beginning of the label (front - with two labels). The pressure roller is locked. The guides of the label strip are positioned and fixed to the edges without compressing it.

Set the required parameters in the machine menu. Start without a container for control. The new label (front label - with two labels) must be up to the peeling edge. If necessary, adjustments are made.

At any time, pressing the C button for more than 3 seconds causes the counter to be reset.

The brightness and contrast of the display can be changed as desired.

Label Path Diagram

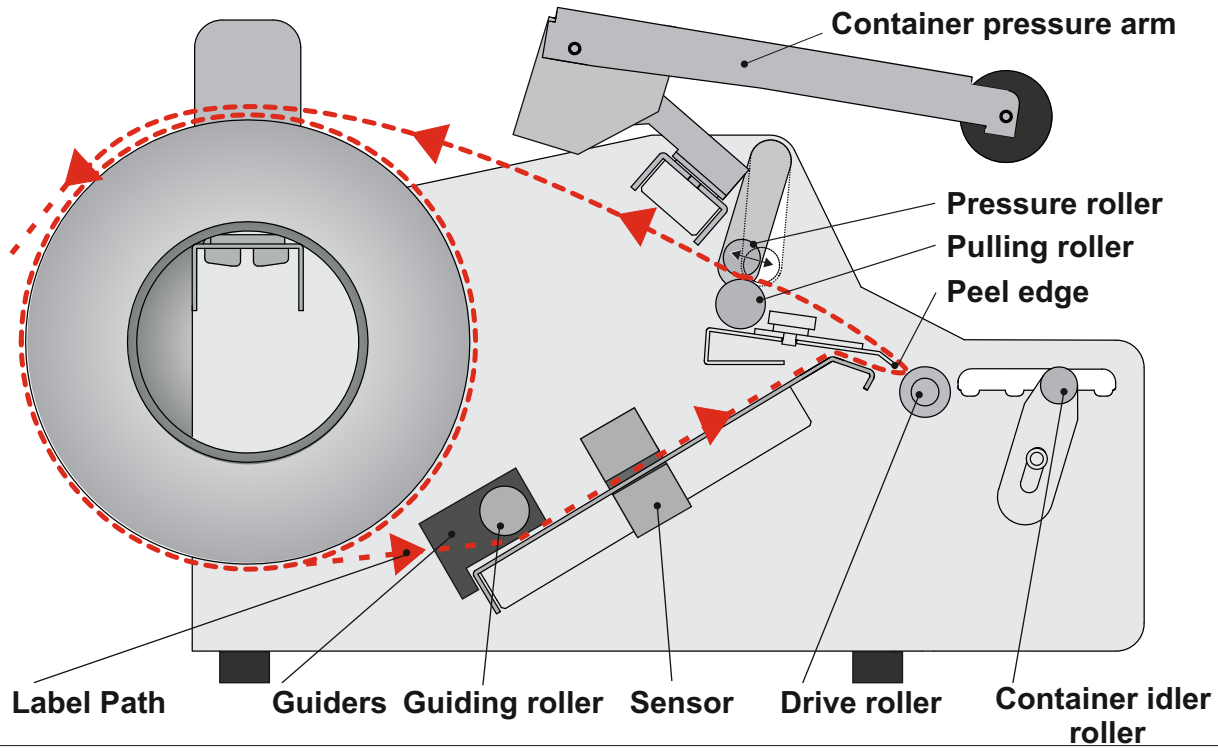

phone: (+359) 66 801 536 fax: (+359) 801 547
info@stselectronics.eu www.stselectronics.eu

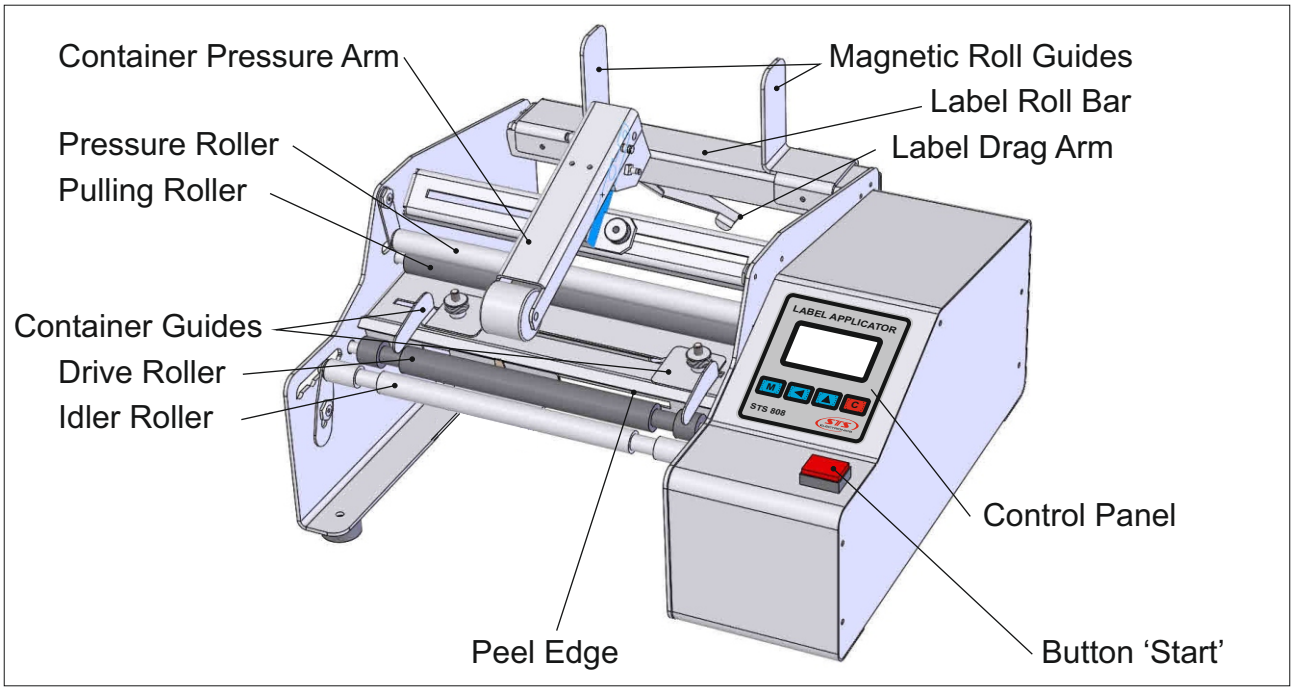

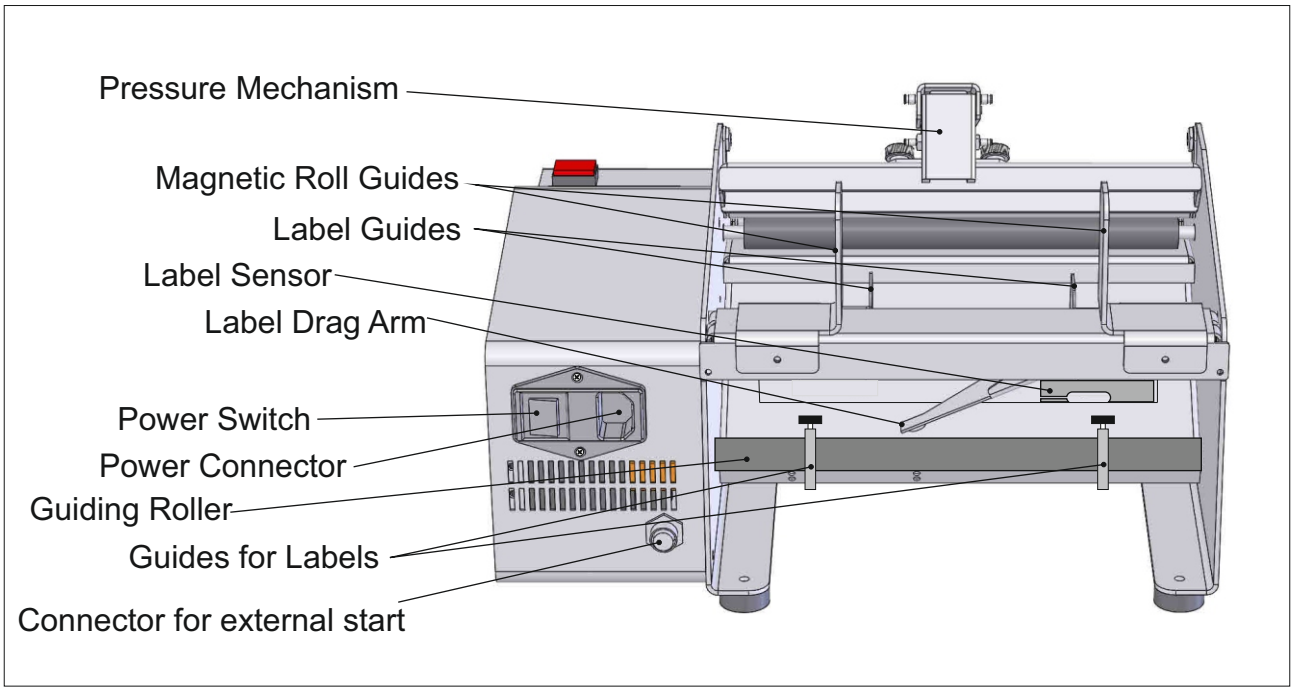

phone: (+359) 66 801 536 fax: (+359) 801 547
info@stselectronics.eu www.stselectronics.eu

Control Panel and Setup

```
MODE 1 LABEL
-----------------------
WAIT START
000
NUMBER LABELS
```

fig.1

After the machine is switched on, an advertisement logo, the machine type / one label - 1, two labels - 2 or the combined version - 3 /, the software version will be displayed. After that will be shown the operating mode - fig.1.

```
MODE 1 LABEL
-----------------------
EXECUTION
001
NUMBER LABELS
```

fig.2

The labeling process is performed by pressing the built-in 'Start' button or by an external start / 'Start' pedal connected to the connector /. The display shows the execution - fig.2. Upon completion of the process, the label counter grows. If you want to reset the counter you can just press the button [C] at any time more than 3 seconds.

```
PASSWORD
-----------------------
* * * *
```

fig.3

Access to the menu is password protected. By pressing and holding the button [M] for more than 3 seconds, a password window is displayed - fig.3. Cancel by pressing the button [C] and accessing the input menu by pressing the button [◄] - fig.4. Entering the password is done by changing the digit by pressing the button [▲].
Moving to the next digit is done by pressing the button [◄] By pressing the button [C] returns you at the beginning to enter the password.

```
PASSWORD
-----------------------
* * * 0
```

fig.4

The password for this machine is **8083** - it is static and can not be change by the user. When the password is incorrect on the screen comes up notice for error - fig.5. By pressing button [M] starts from beginning to enter the correct password fig.3. By pressing the button [C] cancel the password menu and the control panel is returning in operating mode - fig.1.

```
PASSWORD
-----------------------
ERROR!
```

fig.5

A correctly entered password gives access to parameter changes. The first window to display is a language selection - fig.6. By pressing the button [◄] language is changing cyclically - fig.7. Confirm the desired choice by pressing [M] The next parameter is mode selection / 1, 2 labels/ - fig.8.

```
ИЗБОР НА ЕЗИК
-----------------------
> БЪЛГАРСКИ
  АНГЛИЙСКИ
```

fig.6

By pressing the button [◄] ONE LABEL / TWO LABELS mode is cyclically changed. Confirm the desired choice by pressing the button [M]

```
SELECT LANGUAGE
-----------------------
>ENGLISH
 BULGARIAN
```

fig.7

Select mode 'ONE LABEL'.

When selecting 'ONE LABEL' mode and confirming it, proceed to the next parameter - offset stop - fig.9. Its value determines the correct positioning of the beginning of a next label to the peeling edge. Its determination depends on the length of the label and is given in **Application 1**.

```
SELECT MODE
-----------------------
> ONE LABEL
  TWO LABELS
```

fig.8

Entering is done by changing the digit by pressing the button [▲] Moving to the next digit is done by pressing the button [◄] The process is cyclical.

phone: (+359) 66 801 536 fax: (+359) 801 547
info@stselectronics.eu www.stselectronics.eu

```
OFFSET STOP
-----------------------------
017
^
-----------------------------
[001 ... 999 mm]
```

fig.9

By pressing the button [C] the display is reset. By pressing the button [M] the set offset is confirmed and the next parameter - time move motor- Fig. 10 is set. The value determines the time for rotation of the container in order to stick the label better. It is set by the user at his decision. Entering is done by changing the digit by pressing the button [▲] Moving to the next digit is done by pressing the button [◄] The process is cyclical. By pressing the button [C] the display is reset. By pressing the button [M] the set time is confirmed and switched to operating mode - fig.1.

```
TIME MOVE MOTOR
-----------------------------
02.00
^
-----------------------------
[00.00 ... 60.00 s]
```

fig.10

Select Mode 'TWO LABELS'.

When selecting 'TWO LABELS' in fig. 11, and confirming it, proceed to the introduction of a next parameter - a gap between the labels - fig.12. Entering is done by changing the number by pressing the button [▲] Moving to the next digit is done by pressing the button [◄] The process is cyclical. By pressing the button [C] the display is reset. By pressing the button [M] the entered gap is confirmed and the next parameter - the distance between the labels is set - fig.13.

```
MODE SELECT
-----------------------------
ONE LABEL
>TWO LABELS
```

fig.11

From this value depends the correct position of the front / back label. It is determined by the circumference of the container and the total length of the two labels, shown in **Application 2**.

```
LABELS GAP
-----------------------------
03
^
-----------------------------
[ xx (mm) ]
```

fig.12

Entering is done by changing the digit by pressing the button [▲] Moving to the next digit is done by pressing the button [◄] The process is cyclical. By pressing the button [C] the display is reset. By pressing the button [M] the set distance is confirmed and the next parameter is set - offset stop 1 - fig.14. Its value determines the correct positioning of the beginning of the front label to the peeling edge. Its definition depends on the length of the two labels (front, rear) shown in **Application 3**.

```
DISTANCE LABELS
-----------------------------
01.17
^
-----------------------------
[00.90 ... 30.00 cm]
```

fig13

Entering is done by changing the digit by pressing the button [▲] Moving to the next digit is done by pressing the button [◄] The process is cyclical. By pressing the button [C] the display is reset. By pressing the button [M] the set offset stop 1 is confirmed and the next parameter is set to offset stop 2 - fig.15. Its value determines the correct positioning of the beginning of the back label to the peeling edge. Its definition depends on the length of the two labels (front, rear) shown in **Application 4**.

```
OFFSET STOP 1
-----------------------------
017
^
-----------------------------
[001 ... 999 mm]
```

fig.14

Entering is done by changing the digit by pressing the button [▲] Moving to next the digit is done by pressing the button [◄]

```
OFFSET STOP 2
-----------------------------
017
^
-----------------------------
[001 ... 999 mm]
```

fig.15

phone: (+359) 66 801 536 fax: (+359) 801 547
info@stselectronics.eu www.stselectronics.eu

```
TIME MOVE MOTOR
-----------------------------
        02.00
           ^
-----------------------------
[00.00 ... 60.00 s]
```

fig.16

The process is cyclical. By pressing the button [C] the display is reset. By pressing the button [M] offset stop 2 is confirmed and the next parameter - time move motor - is set. The value determines the time of rotation of the container in order to stick the label better. It is set by the user.

Entering is done by changing the indicated number by pressing the button [▲] Moving to the next digit is done by pressing the button [◄] The process is cyclical. By pressing the button [C] the display is reset. By pressing the button [M] the set time is confirmed and switched to operating mode - fig.1.

If you stay in a parameter menu window for more than 60 seconds without operation / pressing any key, the machine switches to operating mode - fig.1. Changes made so far are recorded.

phone: (+359) 66 801 536 fax: (+359) 801 547
info@stselectronics.eu www.stselectronics.eu

Setting Contrast and Brightness of the LCD

```
MODE 1 LABEL
-----------------------------
WAIT START
000
NUMBER LABELS
```

fig.1

```
CONTRAST
-----------------------------
>>>>
-----------------------------
- CLEAR          + UP
```

fig.2

```
BRIGHTNESS
-----------------------------
>>>>
-----------------------------
- CLEAR          + UP
```

fig.3

Access to the menu to change the display settings is from the operating mode - fig.1.

By pressing and holding for more than 3 seconds the button [▲] enters the contrast setting - fig.2. The current level is displayed with bargraph / >>>> ..... /. Adjustment is done step by step with button [C] for decreasing and button [▲] for increasing.

By pressing the button [M] the desired value is memorized and switches to the brightness setting - fig.3. The current level is displayed with bargraph / >>>> ..... /. Adjustment is done step by step with button [C] for decreasing and button [▲] for increasing.

The desired value is memorized by pressing the button [M] and switches to operating mode - fig.1

phone: (+359) 66 801 536 fax: (+359) 801 547
info@stselectronics.eu www.stselectronics.eu

Application 1.
Determining the value of the parameter - Offset stop.

The sensor which detect the end of the label is on 100mm/ **L** / before peeling edge and its position can not be changed. This requires the Offset Stop parameter to be entered the value of which varies depending on the length of the label. It determines the correct positioning of the beginning of a subsequent label to the peeling edge.

Possible variants are shown in Figure 1.

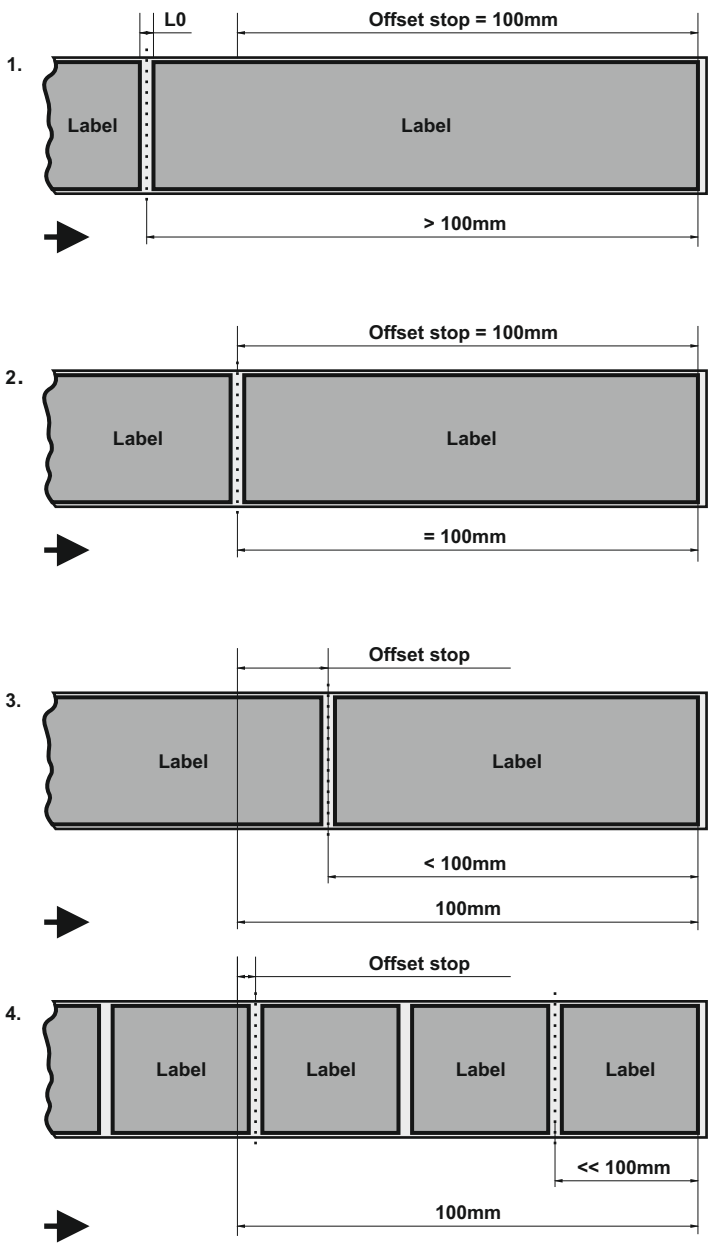

fig.1

1. The length of the used label is longer than **L** .
The offset value is 100 [mm].

2. The length of the used label and the half of the gap are equal to **L**.
The offset value is 100 [mm].

3. The length of the used label is smaller than **L**. The offset value is determined by subtracting the length of the label and half of the gap from 100 [mm].

4. The length of the used label is several times smaller than **L**. The offset value is determined by subtracting the sum of all insertable labels and gaps from 100 [mm] and adding half of the gap.

Note: Measured offset results are a good start. Several adjustments may be needed to more accurately position the beginning of the label.

phone: (+359) 66 801 536 fax: (+359) 801 547
info@stselectronics.eu www.stselectronics.eu

Application 2.
Determining the value of the parameter - Distance between labels

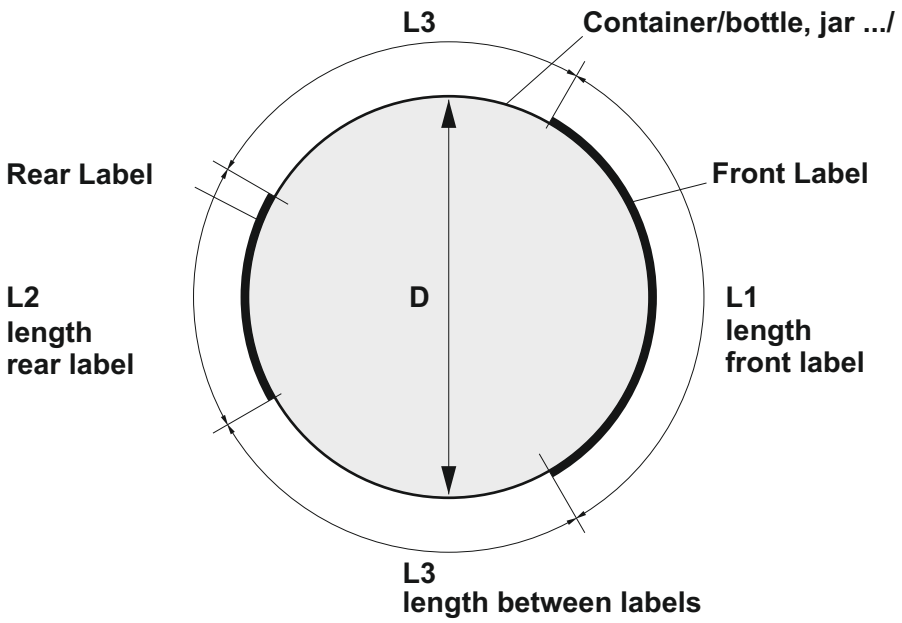

L1 - length front label [mm]
L2 - length rear label [mm]
L3 - length between front and rear label [cm]
D - diameter of the container [mm]

$$L3 = ((D*3,14 - L1 - L2) / 2) /10 \quad [cm]$$

Example:
For a container of 73 mm diameter and a label length of 85 mm and 55 mm respectively, the distance between labels is as follows:
L3 = ((73 * 3,14 - 85 - 55) / 2) / 10 [cm]
L3 = 4.461 [cm].

Enter the value rounded to the second character: 04,46 [cm].

phone: (+359) 66 801 536 fax: (+359) 801 547
info@stselectronics.eu www.stselectronics.eu

Application 3.
Determining the value of the parameter - Offset stop 1.

The sensor which detect the end of the label is on 100mm/ **L** / before peeling edge and its position can not be changed. This requires the Offset Stop 1 parameter to be entered the value of which varies depending on the length of the label. Offset Stop 1 determines the correct positioning of the beginning of a subsequent back label to the peeling edge. The measurement need to be done from the beginning of the back label.

Possible variants are shown in Figure 2.

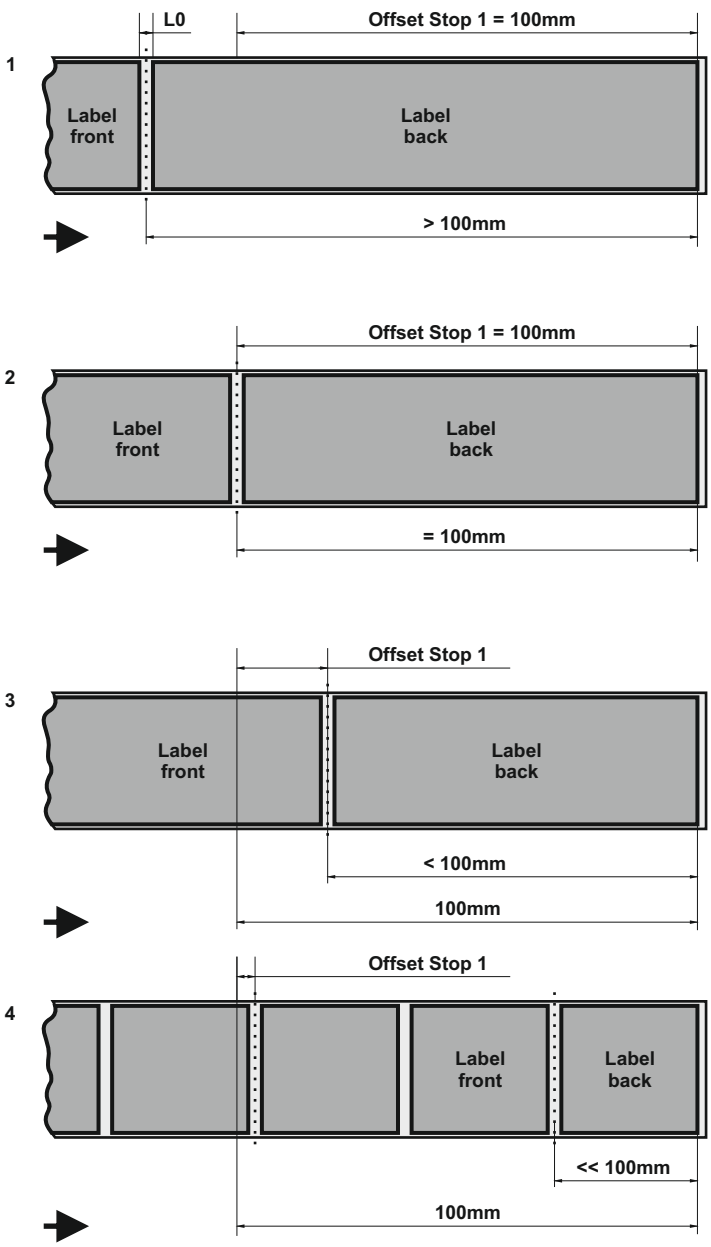

fig. 2

1. The length of the used label is longer than **L** .
The offset value is 100 [mm].

2. The length of the used label and the half of the gap are equal to **L**.
The offset value is 100 [mm].

3. The length of the used label is smaller than **L**. The offset value is determined by subtracting the length of the label and half of the gap from 100 [mm].

4. The length of the used label is several times smaller than **L**. The offset value is determined by subtracting the sum of all insertable labels and gaps from 100 [mm] and adding half of the gap.

Note: Measured offset results are a good start. Several adjustments may be needed to more accurately position the beginning of the label.

phone: (+359) 66 801 536 fax: (+359) 801 547
info@stselectronics.eu www.stselectronics.eu

Application 4.
Determining the value of the parameter - Offset stop 2.

The sensor which detect the end of the label is on 100mm/ **L** / before peeling edge and its position can not be changed. This requires the Offset Stop 2 parameter to be entered the value of which varies depending on the length of the label. Offset Stop 2 determines the correct positioning of the beginning of a subsequent back label to the peeling edge. The measurement need to be done from the beginning of the back label.

Possible variants are shown in Figure 3.

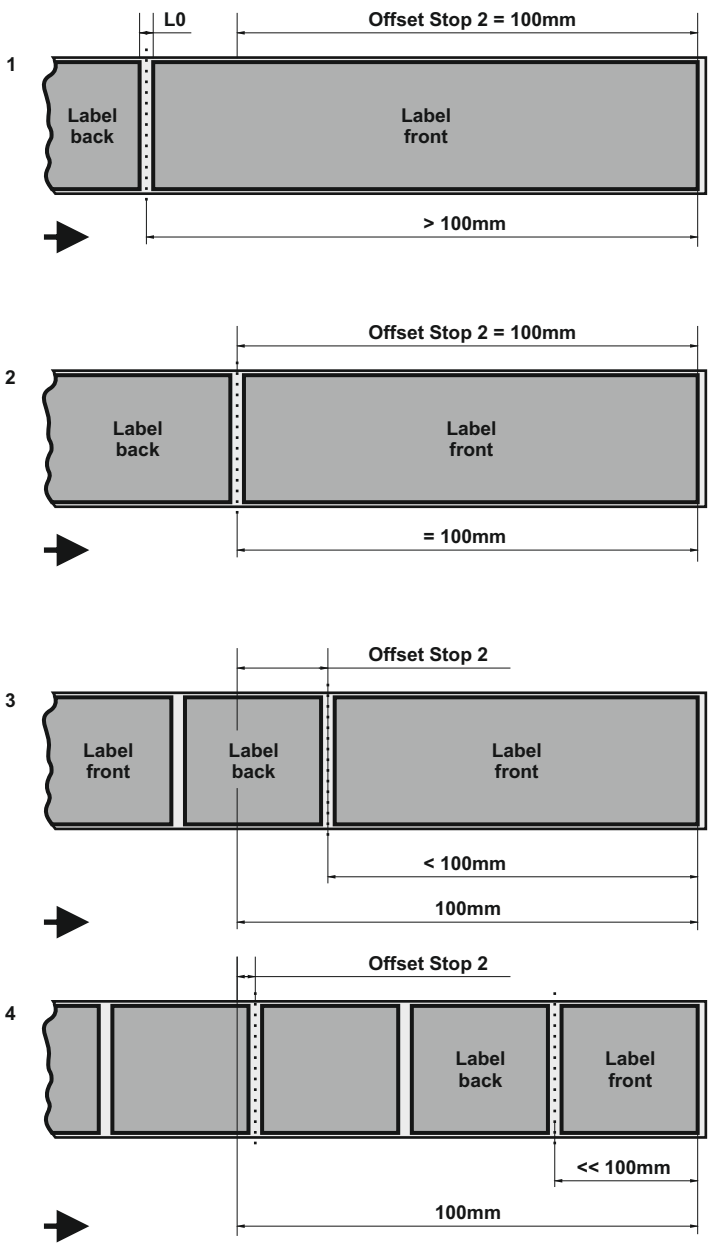

fig.3

1. The length of the used label is longer than **L** .
The offset value is 100 [mm].

2. The length of the used label and the half of the gap are equal to **L**.
The offset value is 100 [mm].

3. The length of the used label is smaller than **L**. The offset value is determined by subtracting the length of the label and half of the gap from 100 [mm].

4. The length of the used label is several times smaller than **L**. The offset value is determined by subtracting the sum of all insertable labels and gaps from 100 [mm] and adding half of the gap.

Note: Measured offset results are a good start. Several adjustments may be needed to more accurately position the beginning of the label.

phone: (+359) 66 801 536 fax: (+359) 801 547
info@stselectronics.eu www.stselectronics.eu

NOTES

phone: (+359) 66 801 536 fax: (+359) 801 547
info@stselectronics.eu www.stselectronics.eu

GENERAL CONDITIONS for usage of electronic devices:

The electronic devices are intended to be used in normal climate conditions in an environment with a normal fire-safety, and without any aggressive to the body material liquids and gases.

GUARANTEE CONDITIONS:

The guarantee period is 12 months from the date of selling.

The manufacturer does not take responsibility in the following cases:

- non-observance of storage conditions;
- non-observance of transport conditions;
- non-observance of operational conditions;
- natural disasters;

The guarantee is only valid if the device is mechanically intact, and there is no sign of attempts for eliminating damage by unauthorized personnel. Transportation expenses are on customer's account.

Attention: No organic dissolvent agents should be used for cleaning the front panel!

FACTORY NUMBER:_____

STS808